studocu

IS222 Test 1 solution 2020

database (The University of Fiji)

Scan to open on Studocu

Studocu is not sponsored or endorsed by any college or university
Downloaded by Chile Pinochet (c1197731202@gmail.com)

The University of the South Pacific

School of Computing, information and Mathematical Sciences

IS222: Database Management Systems

Short Test Semester 1, 2020

Total Marks: 100 - (25% of final grade)

This examination has two Parts:

Part A: Multiple Choice (25 marks -5% Online Quiz available on Moodle)
Part B: Modelling & Normalization (75 marks -20% case study and problem-based questions)

Learning Outcomes:

1. Explain the fundamental concepts of various database management systems.
2. Construct a data model for a relational database management system.

Instructions:

1. All questions are compulsory.
2. This paper has 11 pages, including this page.

This document is available on studocu

Downloaded by Chile Pinochet (c1197731202@gmail.com)

Case Study – Movie Rental Company Records

A movie rental company in Nadi in Fiji is in the business of renting movies. They hired a database designer who designed the following three tables for the company to allow it to manage customer, movie, and movie rental records. Study these tables and answer the questions that follow.

Movie Rental Records								
Rent #	Customer	Mobile	Movie Code	Movie Copy #	Movie Charge	Total Amount	Date	Date Return
1	Leona Dunne	894-1238	M3456	3	$3.50	$7.50	15-Mar-04	17-Mar-04
1	Leona Dunne	894-1238	W1234	3	$4.00	$7.50	15-Mar-04	16-Mar-04
2	Jim Matai	894-2285	M3456	2	$3.50	$4.00	15-Mar-04	17-Mar-04
3	Alfred Ramas	844-2573	R2345	1	$4.00	$4.00	15-Mar-04	
4	Alfred Ramas	844-2573	S4567	2	$3.00	$7.00	16-Mar-04	
4	Alfred Ramas	844-2573	W1234	4	$4.00	$7.00	16-Mar-04	18-Mar-04
4	Alfred Ramas	844-2573	W1234	5	$4.00	$7.00	16-Mar-04	18-Mar-04
5	Leona Dunne	894-1238	R2345	1	$4.00	$4.00	17-Mar-04	19-Mar-04
6	Alfred Ramas	844-2573	W1234	1	$4.00	$4.00	17-Mar-04	19-Mar-04

Movie Records			
Movie Code	Movie	Movie Charge	Movie Copy #
M3456	Ramblin' Tulip	$3.50	1
M3456	Ramblin' Tulip	$3.50	2
M3456	Ramblin' Tulip	$3.50	3
R2345	Once Upon a Midnight Breezy	$4.00	1
R2345	Once Upon a Midnight Breezy	$4.00	2
S4567	Tulips and Threelips	$3.00	1
S4567	Tulips and Threelips	$3.00	2
S4567	Tulips and Threelips	$3.00	3
W1234	Bright Stars and Doodle Berries	$4.00	1
W1234	Bright Stars and Doodle Berries	$4.00	2
W1234	Bright Stars and Doodle Berries	$4.00	3
W1234	Bright Stars and Doodle Berries	$4.00	4
W1234	Bright Stars and Doodle Berries	$4.00	5

Customer Records		
Number	Name	Mobile
1001	Alfred Ramas	844-2573
1002	Leona Dunne	894-1238
1003	Jim Matai	894-2285
1004	Paul Olowski	894-2180
1005	Myron Orlando	222-1672
1006	Savita Devi	442-3381
1007	Jone Yalo	297-1228

Downloaded by Chile Pinochet (c1197731202@gmail.com)

1. List five possible issues with the above database design. **(5 marks)**

Answer:

1. The database should have made use of the Customer Number from the customer table to identify each customer rather than the Customer Name and Mobile Number
2. The repetition in the first table is resulting because a customer can rent many movies in a single rental transaction, that is, in one visit.
3. The data in the Movie Records table is repeating because there can be many copies of the same movie.
4. The customer table does not have redundancy issues but contains a composite attribute.
5. In all tables, the table name and the column names have to be changed.

2. Briefly explain two issues with the "Customer Records" table. **(2 marks)**

Answer:

• Naming convention – this applies consistently to all tables. The names of the columns and the tables are not standard.

• Name is a composite attribute, which should be broken down into first and last name columns.

3. Identify the repeating group in the "Movie Rental Records" table, and briefly justify your choice. **(2 marks)**

Answer:

• RG = Movie Code + Movie Copy # + Movie Charge + Date Return

• Reason – since a customer can rent many movies in a single rental transaction, other values in the table are repeating.

4. List the business rules that can result in this database. **(4 marks)**

Answer:

1. A Movie can be rented by no or many Customers, and each Customer can rent no or many movies.
   a. This results in the Rent bridging entity

2. A Movie can have one or many copies, but each copy is of precisely one Movie.

This document is available on studocu

Downloaded by Chile Pinochet (c1197731202@gmail.com)

5. Use the following diagram to create the dependency diagram for the "Movie Rental Records" table showing all types of dependencies that are functional, partial, and transitive. **(8 marks)**

Rent #	Customer	Mobile	Movie Code	Movie Copy #	Movie Charge	Total Amount	Date	Date Return

Answer:

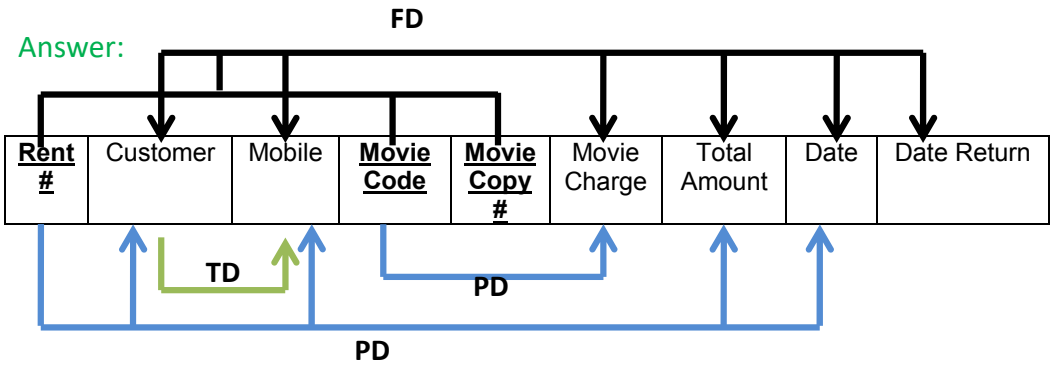

6. Using the initial dependency diagram you have given above, convert your table structure to 2NF, and draw the new dependency diagram. **(6 marks)**

Movie Rental Records Table – 2 NF

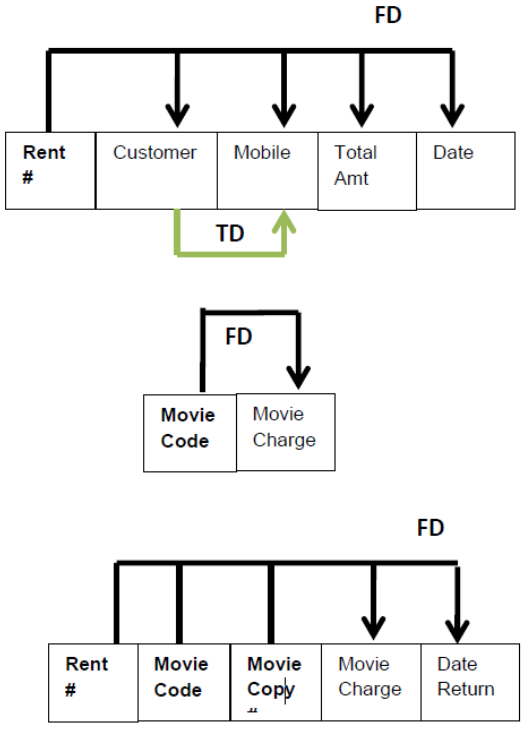

Downloaded by Chile Pinochet (c1197731202@gmail.com)

2 marks for each table.

- Deduct 0.5 marks if attribute name is wrong.
- Deduct 0.5 marks if table name is not given
- Deduct 0.5 marks if PK is not identified
- Deduct 0.5 mark if FD not shown

7. Using the table structures, you created above, convert your table structure to 3NF, and draw the new dependency diagram. **(5 marks)**

3 marks for all table same as from 2NF and 2 marks for the customer table

Movie Rental Records Table – 3 NF

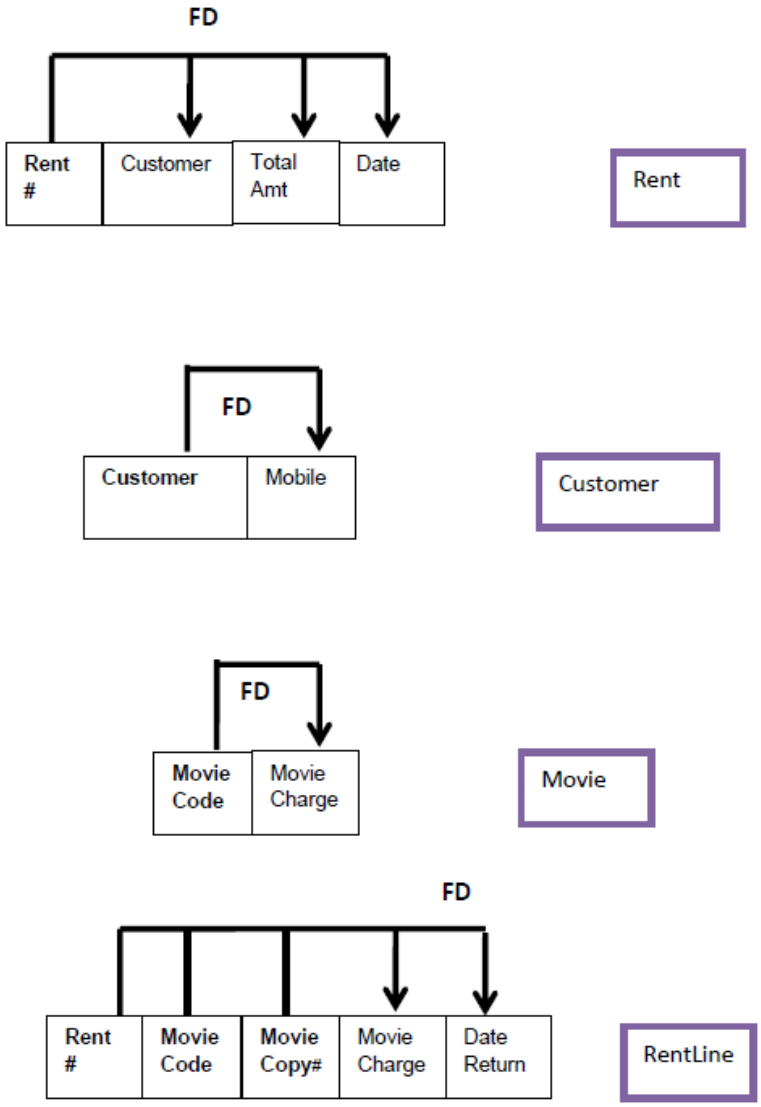

This document is available on studocu

Downloaded by Chile Pinochet (c1197731202@gmail.com)

8. Redesign the above database and write the relational schema showing the structure of **all tables in 3NF**. **(15 marks)**

Answer:

Customer (**Cust_Num** → Cust_FName, Cust_LName, Cust_Mobile)

Movie (**Movie_Code** → Movie_Name, Movie_Charge)

MovieCopy (**Movie_Code**, **MC_Num**)

Rent (**Rent_Num** → Rent_Date, Rent_Total, Cust_Code)

RentLine (**Rent_Num**, **Movie_Code**, **MC_Num** → RL_Charge, RL_DateReturn)

Markers Note:

3 marks each → 1 mark = PK, 1 mark = other attributes, 1 mark = layout + naming convention, partial marks possible

9. Briefly explain the steps you took to redesign the database and how it fits with the normalization process. **(6 marks)**

All tables are in 1NF. After creating the dependency diagram for the first table, partial dependencies were removed by creating a new entity for each PD. This resulted in the Rent table, while the movie table already present in the database. This was getting the tables from first to second normal form. This is the second major step of the normalization process. After this was done, any TD was removed to leave all tables in 3NF.No new tables were created as the Customer table was present. This is the third major step of the normalization process. Since we target the 3NF for all tables, we leave the design at this stage.

For the second table, we identified a partial dependency and removed it from the Movie table. This introduced the MovieCopy and the Movie tables.

The Customer table was modified by removing the composite attribute, which is not actually part of the Normalization process but a fundamental principle of the ER modeling approach. All attributes and tables were renamed appropriately, which is a fundamental principle of the ER modeling approach.

Downloaded by Chile Pinochet (c1197731202@gmail.com)

10. Create the ERD for the database showing the entities, relationship between the entities (show the connectivity, cardinality, and strength of relationship), primary and foreign keys, and other attributes along with the data types. **(17 marks)**

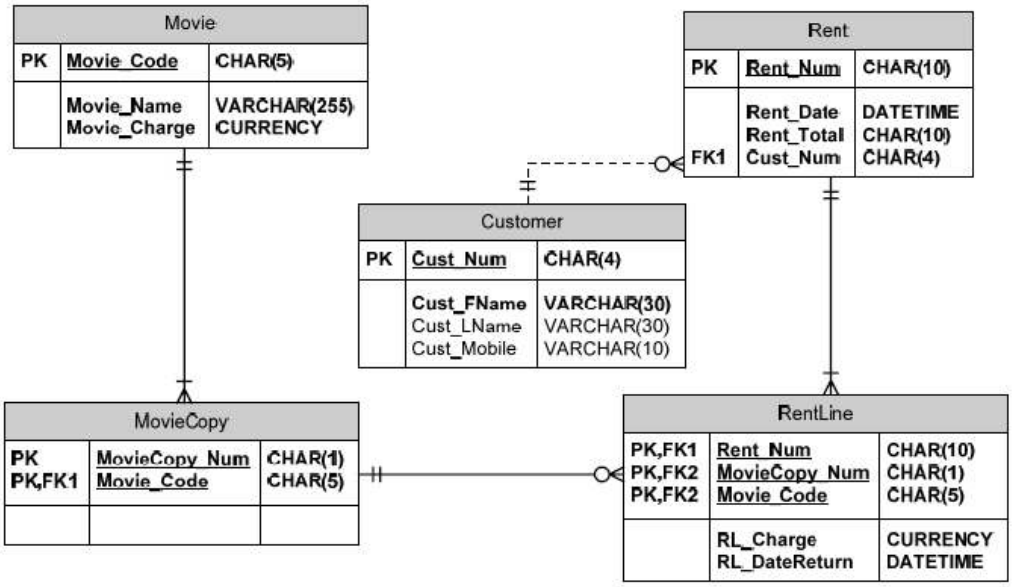

11. Without introducing data redundancy, how can we modify this database to allow us to record the correct total amount for each movie rental transaction? At present, For some records, the total amount does not add up to the actual total for the rental transaction. This indicates an error by the user or a discount/fine that is not correctly handled by the database. Please discuss in detail any new business rule(s), the structure of any new table that you plan to introduce, and the changes(if any) to be made to existing tables. **(5 marks)**

Answer

To cater for the adjustments in the rent amount, the following rentline table can be used:

RentLine (**Rent_Num**, **Movie_Code**, **MC_Num** → RL_Charge, RL_DateReturn, RL_Fine, RL_Discount)

This document is available on studocu

Downloaded by Chile Pinochet (c1197731202@gmail.com)